50-3100 Top Level

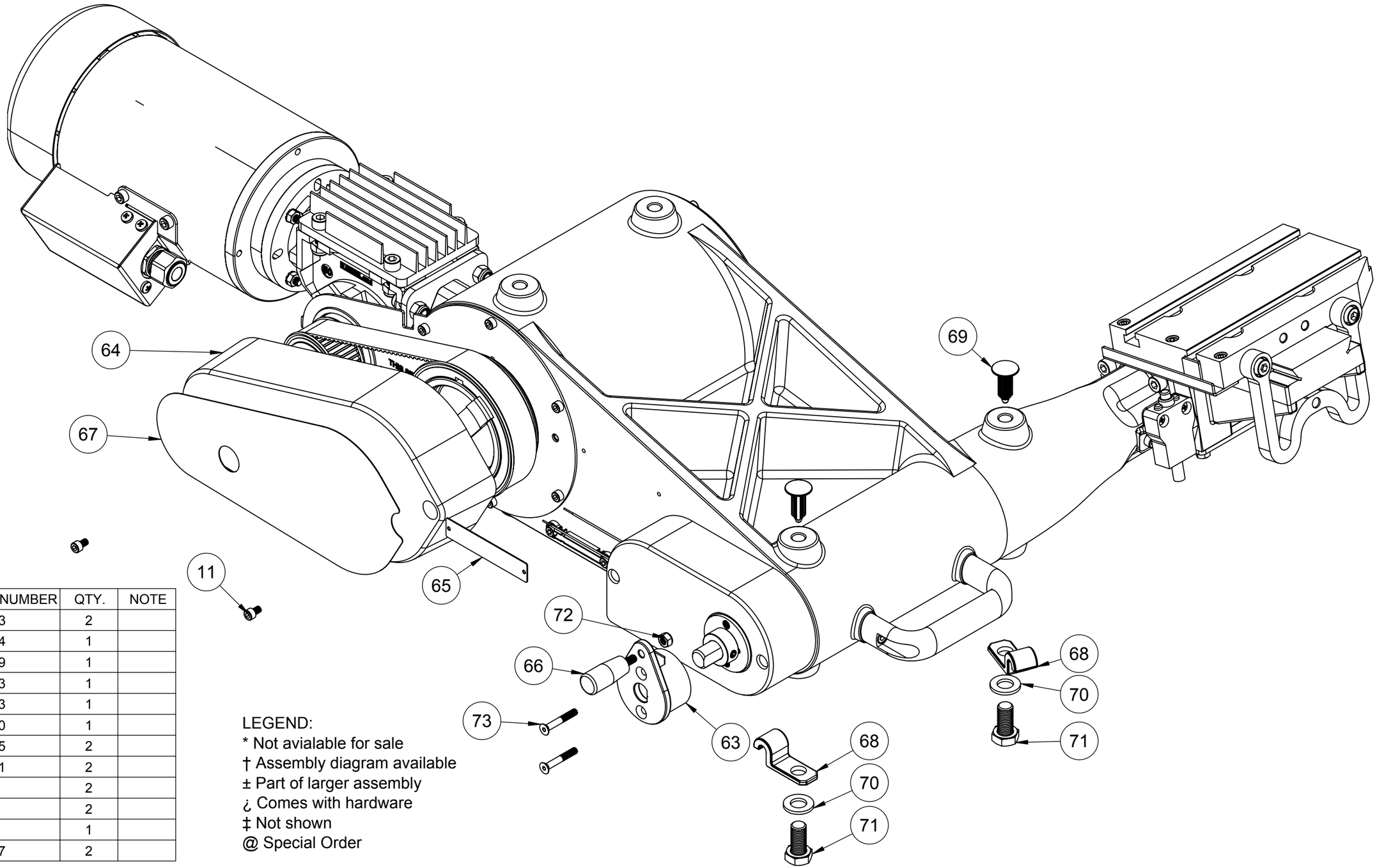

ITEM NO.	PART NUMBER	QTY.	NOTE
11	35-3003	2	
63	50-3034	1	
64	50-3019	1	
65	50-3853	1	
66	37-3033	1	
67	50-3850	1	
68	50-3025	2	
69	37-3421	2	
70	37-004	2	
71	35-348	2	
72	36-020	1	
73	35-3007	2	

LEGEND:
* Not avialable for sale
† Assembly diagram available
± Part of larger assembly
¿ Comes with hardware
‡ Not shown
@ Special Order

50-3100 Feed Drive

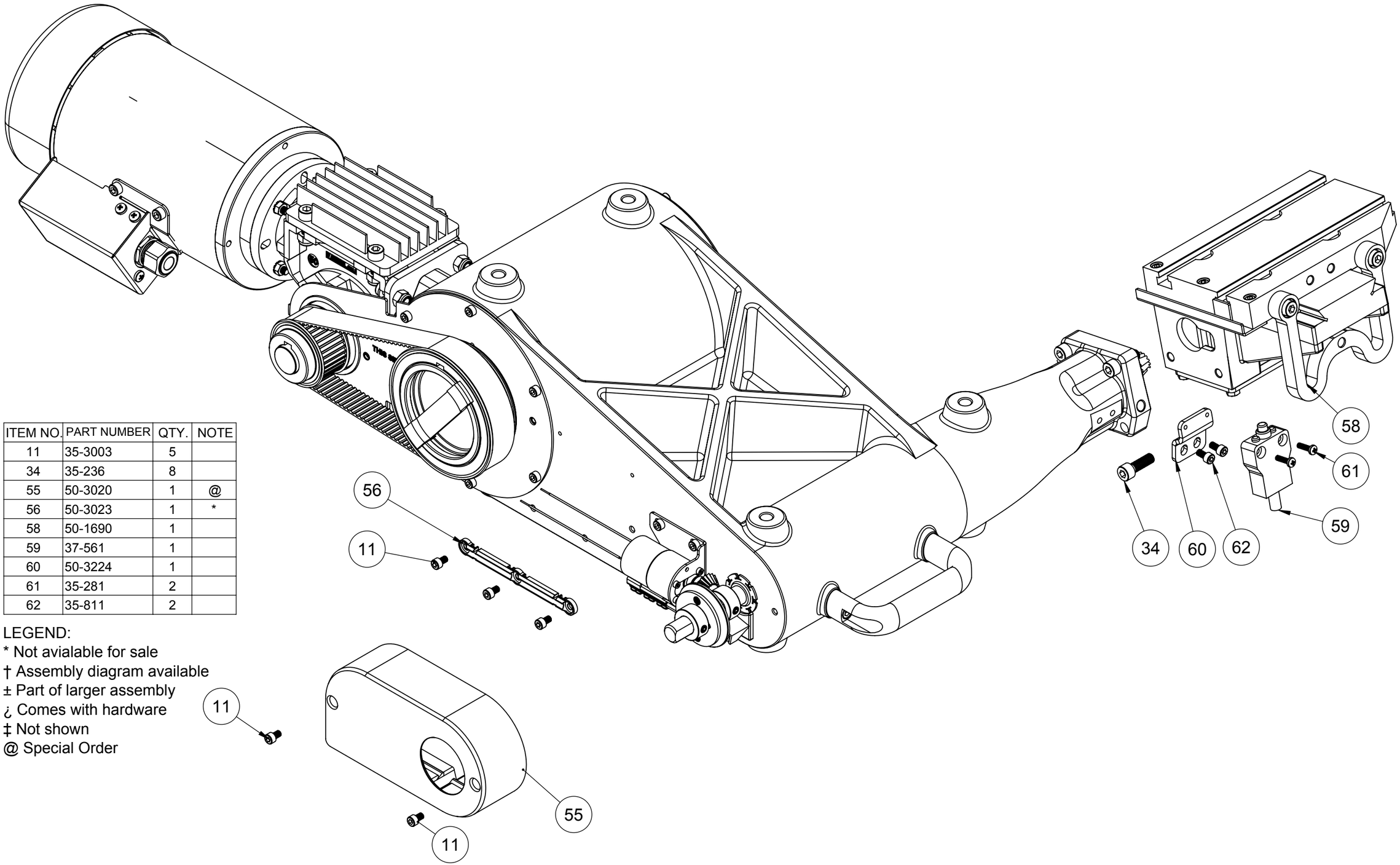

ITEM NO.	PART NUMBER	QTY.	NOTE
11	35-3003	5	
34	35-236	8	
55	50-3020	1	@
56	50-3023	1	*
58	50-1690	1	
59	37-561	1	
60	50-3224	1	
61	35-281	2	
62	35-811	2	

LEGEND:
* Not avialable for sale
† Assembly diagram available
± Part of larger assembly
¿ Comes with hardware
‡ Not shown
@ Special Order

50-3100 / 50-3110 Feed

ITEM NO.	PART NUMBER	QTY.	NOTE
11	35-3003	2	
41	35-3002	2	
42	37-2201	1	*
43	50-3040	1	@
44	37-3029	1	@
45	50-3031	1	*
46	50-3032	1	
47	37-3031	2	
48	37-3032	1	
49	50-3033	1	
50	50-3035	1	
51	37-4052	4	
52	35-3001	1	
53	35-3010	1	
54	35-3006	4	

LEGEND:
* Not avialable for sale
† Assembly diagram available
± Part of larger assembly
¿ Comes with hardware
‡ Not shown
@ Special Order

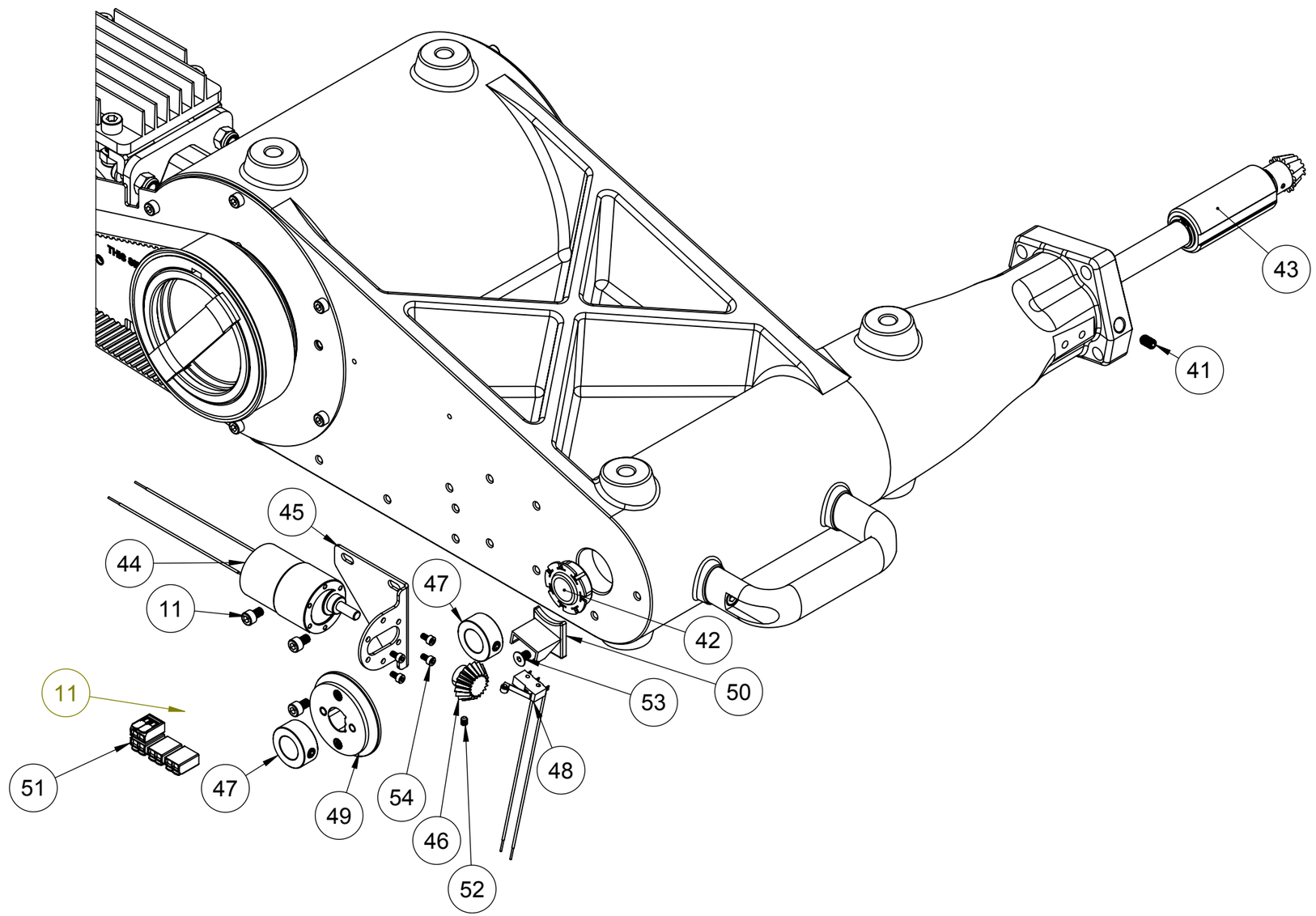

50-3100 / 50-3110 Drive

ITEM NO.	PART NUMBER	QTY.	NOTE
11	35-3003	6	
14	37-3210	1	
15	50-1847	1	@
16	50-3017	1	@
17	50-3018	1	*
18	50-3015	1	*
19	50-3013	1	‡
20	37-3005	1	@
21	50-2209	1	@
22	50-2390	1	
23	50-2260	1	@
24	50-2263	1	
25	50-3037	1	*
26	50-3038	1	@
27	37-706	1	
28	35-291	2	
29	35-834	3	
30	35-3012	1	
31	37-3405	1	*
32	35-4057	4	
33	36-4017	4	
34	35-236	4	
35	36-002	8	
36	37-3100	1	
37	37-426	1	
38	35-3402	4	
39	37-003	4	
40	35-427	1	
41	35-3002	1	

Wires Not Shown:

PART NUMBER	DESCRIPTION	QTY.	NOTE
50-3211	DC MOTOR LEAD HARNESS	1	‡
50-2381	POWER UMBILICAL 48v JACKETED	1	‡

LEGEND:
* Not avialable for sale
† Assembly diagram available
± Part of larger assembly
¿ Comes with hardware
‡ Not shown
@ Special Order

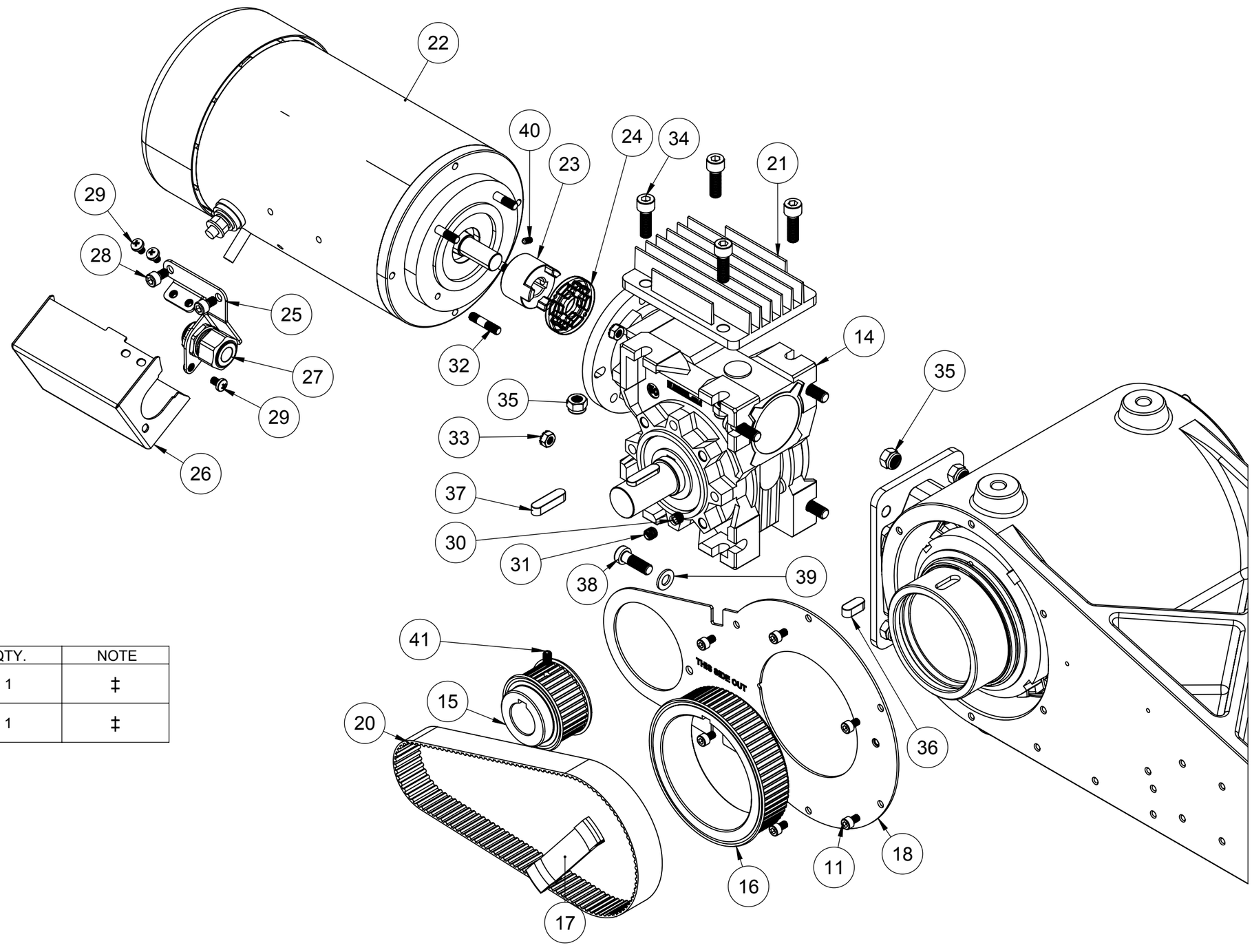

50-3100 / 50-3110 Body

ITEM NO.	PART NUMBER	QTY.	NOTE
1	50-3005	1	*
2	37-3001-Cup	2	*
3	37-3001-Cone	2	*
4	37-813	1	
5	50-3006	1	*
6	50-3011	1	*
7	50-3012	1	*
8	37-3003	1	*
9	37-3003	1	*
10	50-3014	1	*
11	35-3003	6	
12	35-717	2	
13	35-3008	4	

LEGEND:
* Not avialable for sale
† Assembly diagram available
± Part of larger assembly
¿ Comes with hardware
‡ Not shown
@ Special Order

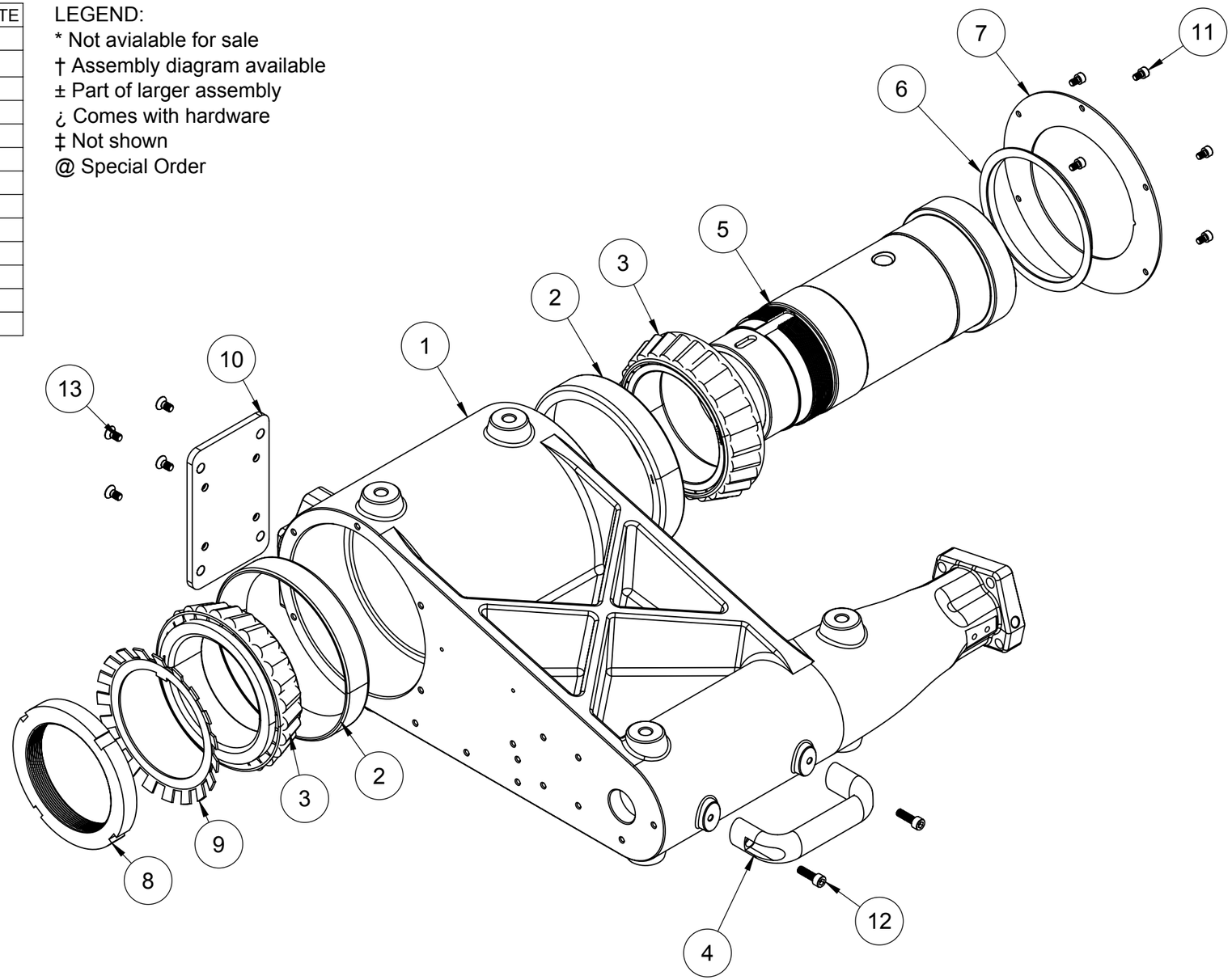

X1 Control-8

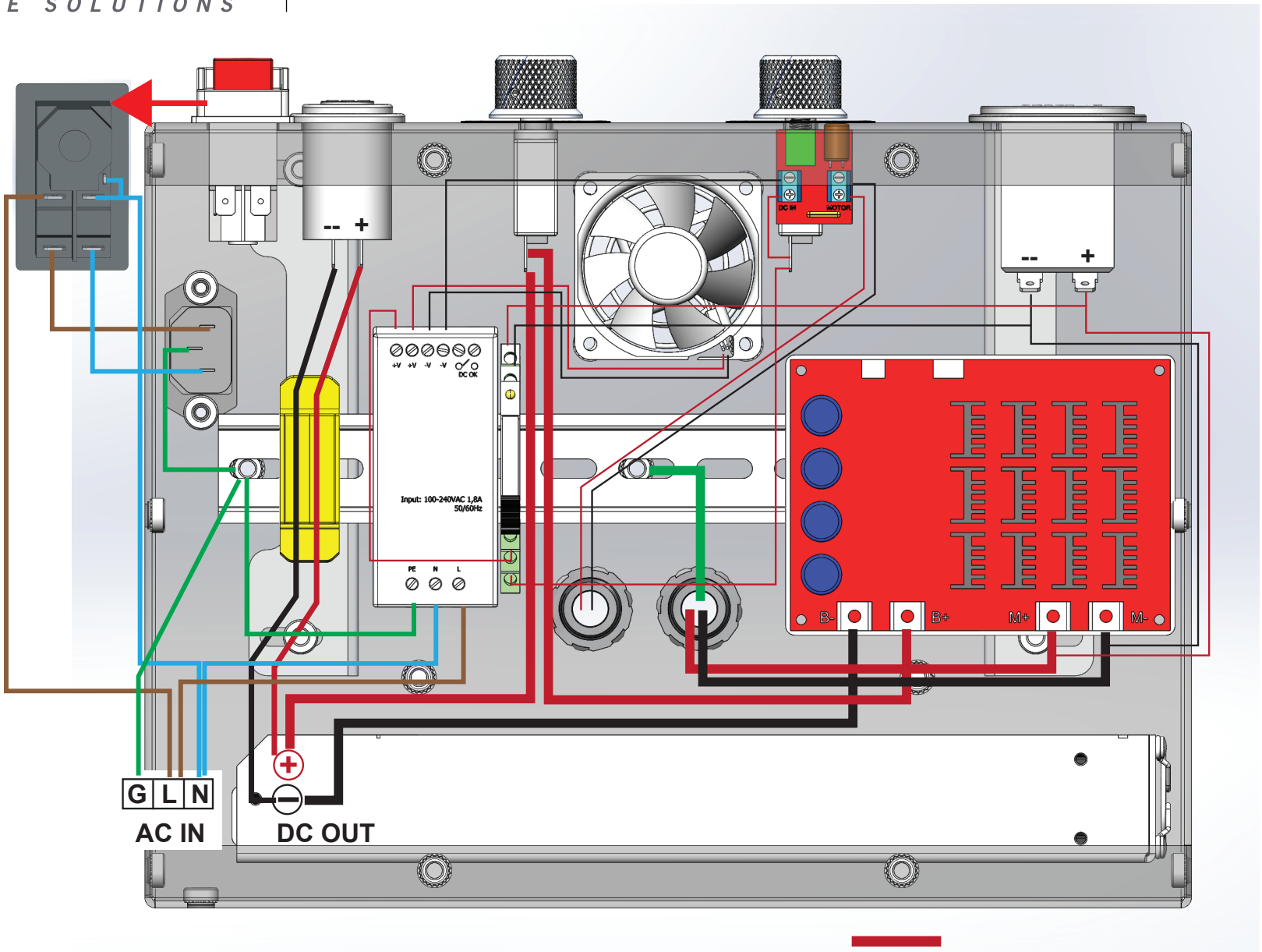

ALPHA WIRE PART NO. 6714:
ECOWIRE TM 20 AWG E163869-*
RU AWM 11028 105C 600V VW-1 --- CRU AWM I A/B
105C 600V FT1 CE ROHS

ALPHA WIRE PART NO. 6718:
ECOWIRE TM 12 AWG E163869-*
RU AWM 11028 105C 600V VW-1 --- CRU AWM I A/B
105C 600V FT1 CE ROHS

X1 Feed-1

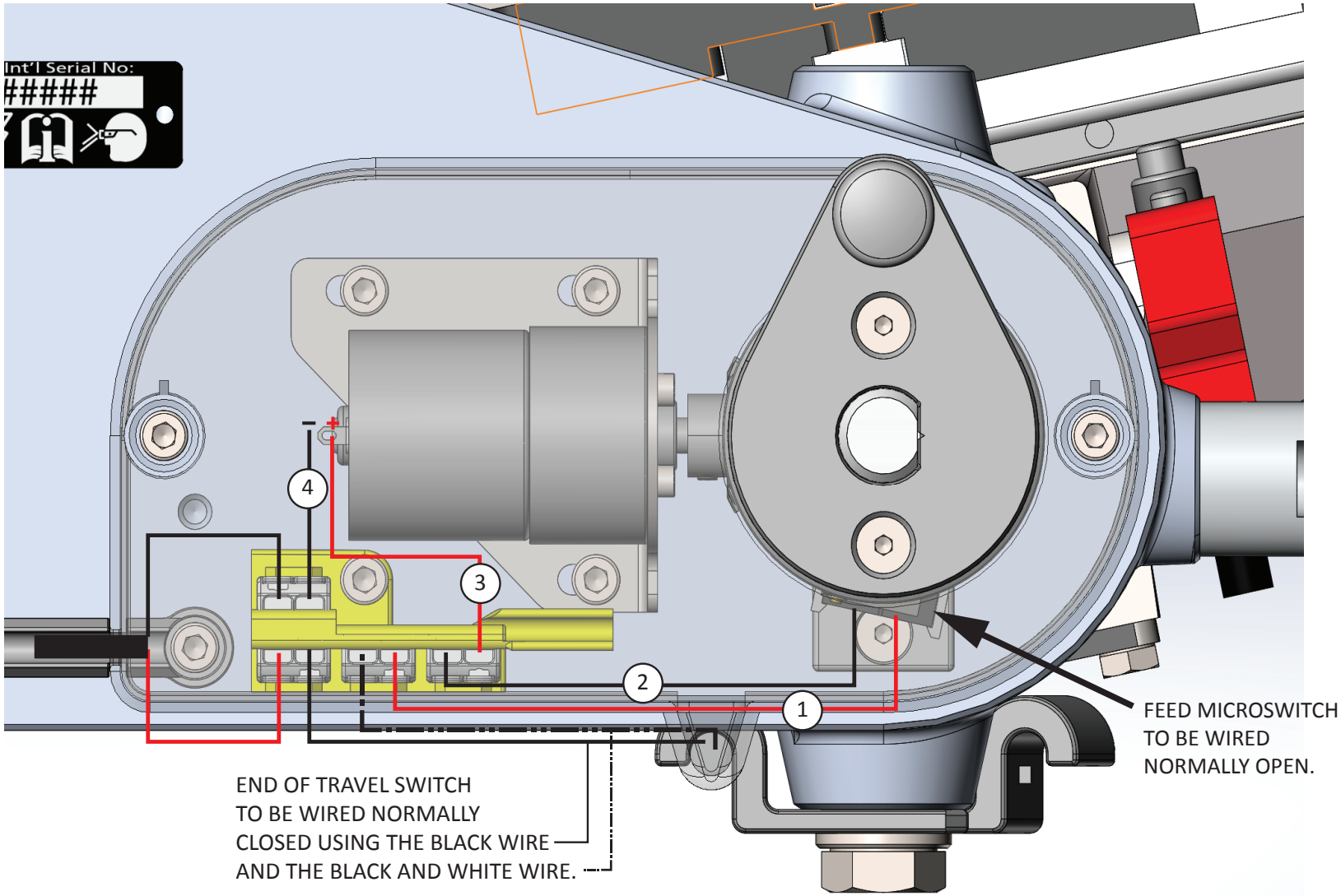

1. 20 gauge stranded x 150mm, soldered to switch
2. 20 gauge stranded x 150mm, soldered to switch
3. 20 gauge stranded x 120mm, soldered to motor +
4. 20 gauge stranded x 120mm, soldered to motor --

WIRE TO BE MCMASTER-CARR # 6450T25 OR EQUIVALENT.

X1 Trolley-1

ITEM NO.	PART NUMBER	QTY.	NOTE
1	50-3401	1	*
2	50-3415	2	@
3	37-038	4	
4	37-3412	2	
5	37-3423	2	@
6	35-304	4	
7	36-001B	4	
8	37-993	4	
9	35-3408	2	
10	37-003	2	
11	36-002	2	

Not Shown:
Caster Brake: 37-039 QTY 2.
Assemble on casters nearest springs.

LEGEND:
* Not avialable for sale
† Assembly diagram available
± Part of larger assembly
¿ Comes with hardware
‡ Not shown
@ Special Order

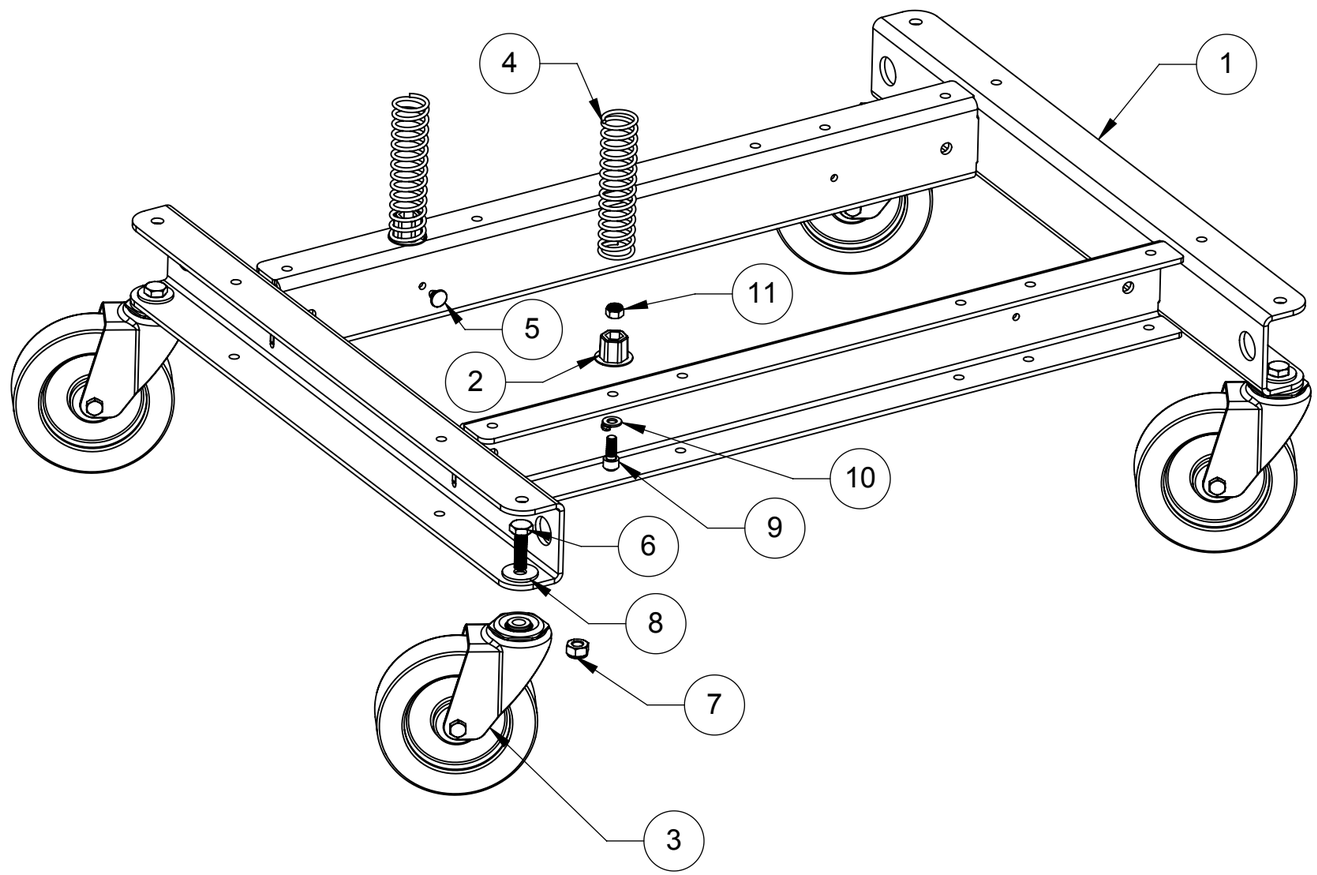

X1 Trolley-2

ITEM NO.	PART NUMBER	QTY.	NOTE
2	50-3415	2	@
7	36-001B	6	
10	37-003	8	
11	36-002	4	
12	50-3402	1	*
13	50-3413	2	@
14	50-3416	1	*
15	50-3418	2	@
16	35-3408	6	
17	35-328	4	
18	37-454	4	
19	36-020	4	
20	35-3401	2	
21	37-011	3	
22	37-162	1	

LEGEND:
* Not avialable for sale
† Assembly diagram available
± Part of larger assembly
¿ Comes with hardware
‡ Not shown
@ Special Order

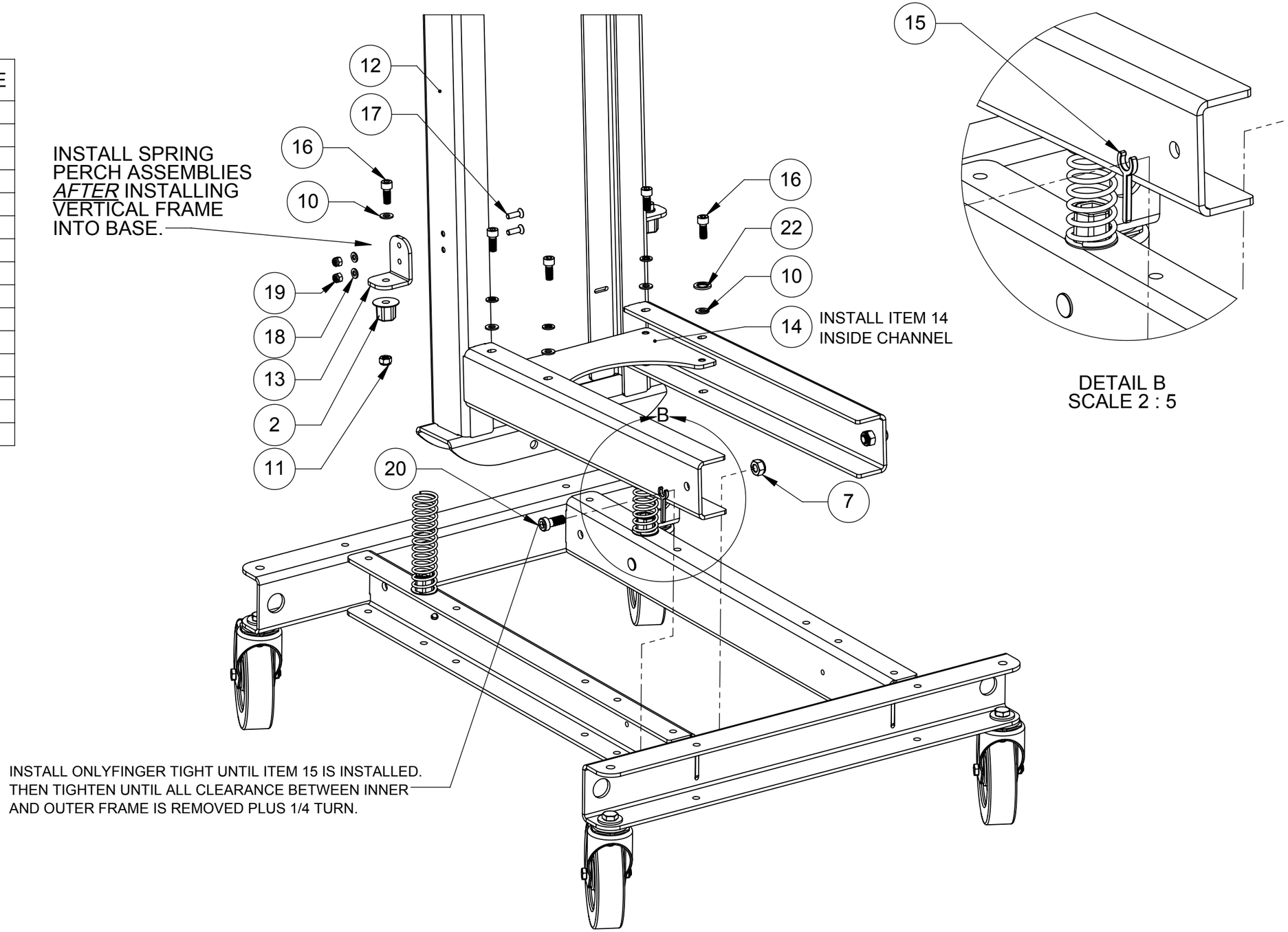

X1 Trolley-3

ITEM NO.	PART NUMBER	QTY.	NOTE
1	50-3406	1	*
2	50-3422	1	@
3	50-3428	4	@
4	50-3423	1	
5	36-3402	4	
6	35-3400	4	
7	37-3409	8	
8	35-273	2	
9	37-3416	2	
10	37-3415	1	@

LEGEND:
* Not avialable for sale
† Assembly diagram available
± Part of larger assembly
¿ Comes with hardware
‡ Not shown
@ Special Order

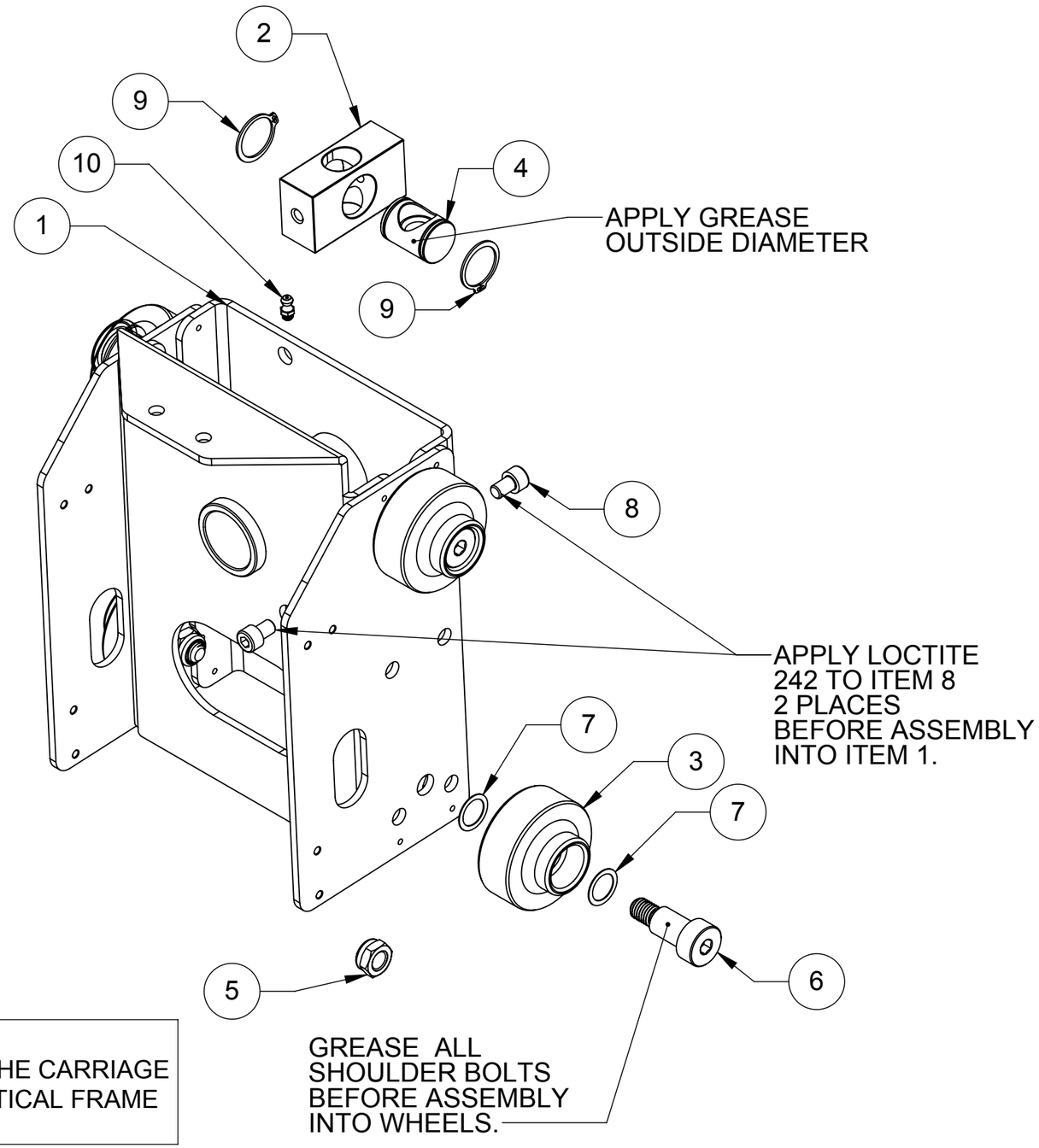

NOTE:
DO NOT INSTALL ITEMS 2, 5, 7, 8 UNTIL THE CARRIAGE ASSEMBLY IS INSTALLED INTO THE VERTICAL FRAME AND GAS SPRING IS INSTALLED.

X1 Trolley-4

ITEM NO.	PART NUMBER	QTY.	NOTE
36	35-260	1	
40	37-498	4	
42	50-3412	1	@
43	50-3411	2	@
44	50-3426	4	
45	37-3413	1	
47	37-110	1	

LEGEND:
* Not avialable for sale
† Assembly diagram available
± Part of larger assembly
¿ Comes with hardware
‡ Not shown
@ Special Order

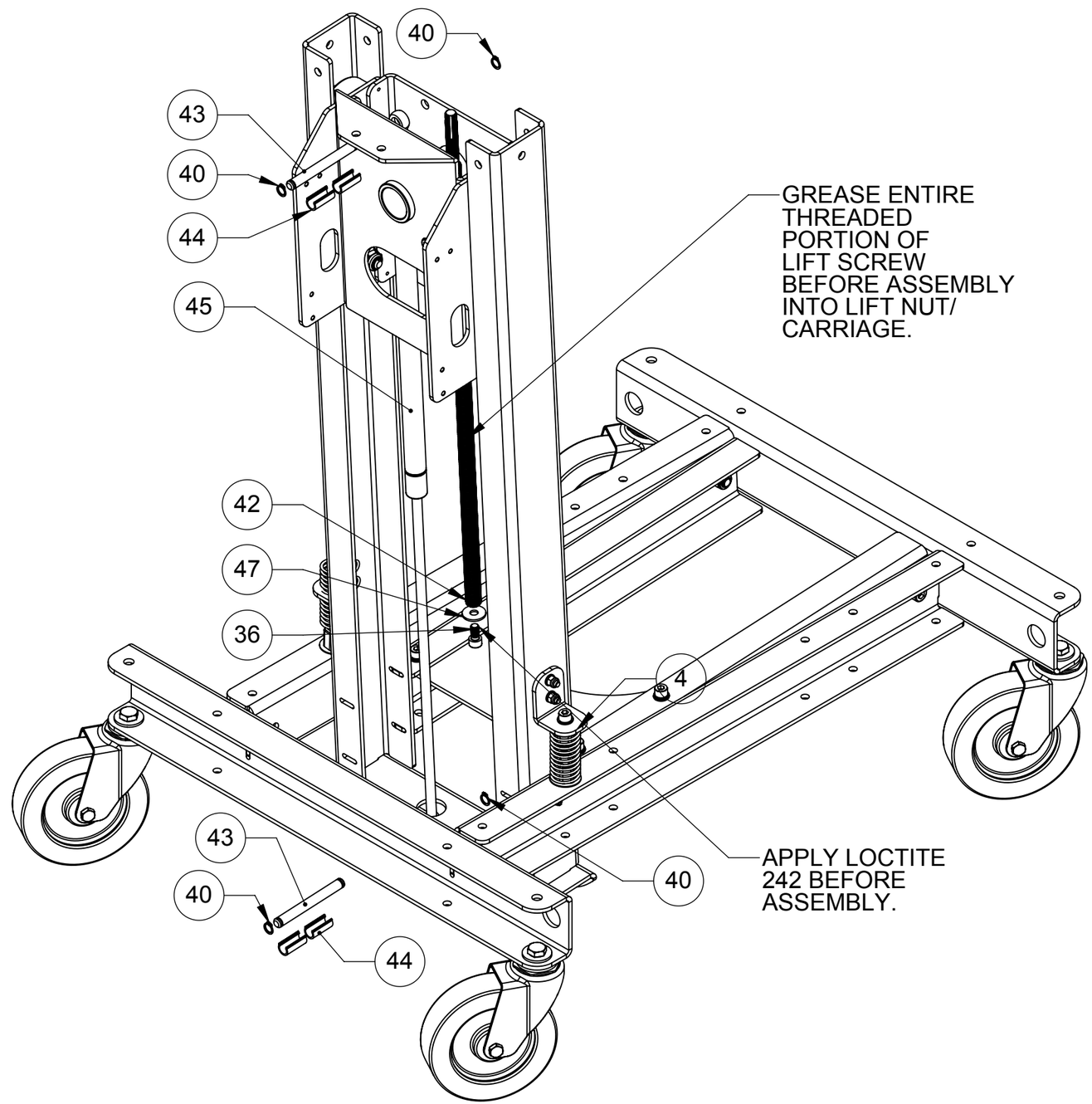

X1 Trolley-5

ITEM NO.	PART NUMBER	QTY.	NOTE
28	35-273	4	
39	50-3405	1	*
40	50-3409	1	@
41	37-3410	1	
42	50-3420	1	
43	50-3421	2	@
44	37-3508	1	
45	35-292	4	

LEGEND:
* Not avialable for sale
† Assembly diagram available
± Part of larger assembly
¿ Comes with hardware
‡ Not shown
@ Special Order

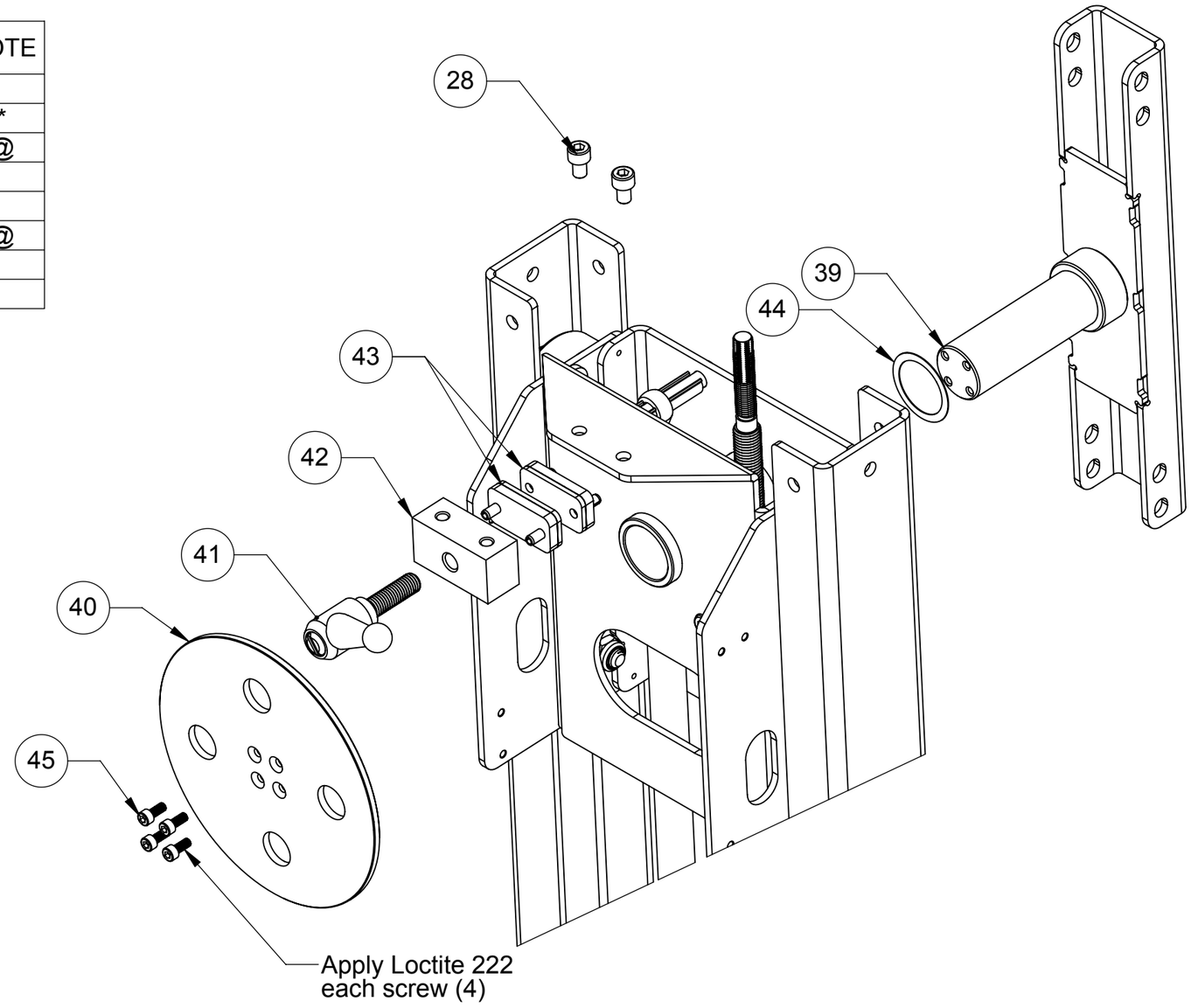

X1 Trolley-6

GREASE POINT.

1. ADD GREASE UNTIL SOME GREASE SQUEEZES OUT THE FRONT OR BACK END OF THE AXLE TUBE.

2. ROTATE AXLE TO SPREAD GREASE EVENLY ON AXLE.

3. WIPE OFF ANY VISIBLE GREASE BEFORE ASSEMBLY INTO TROLLEY.

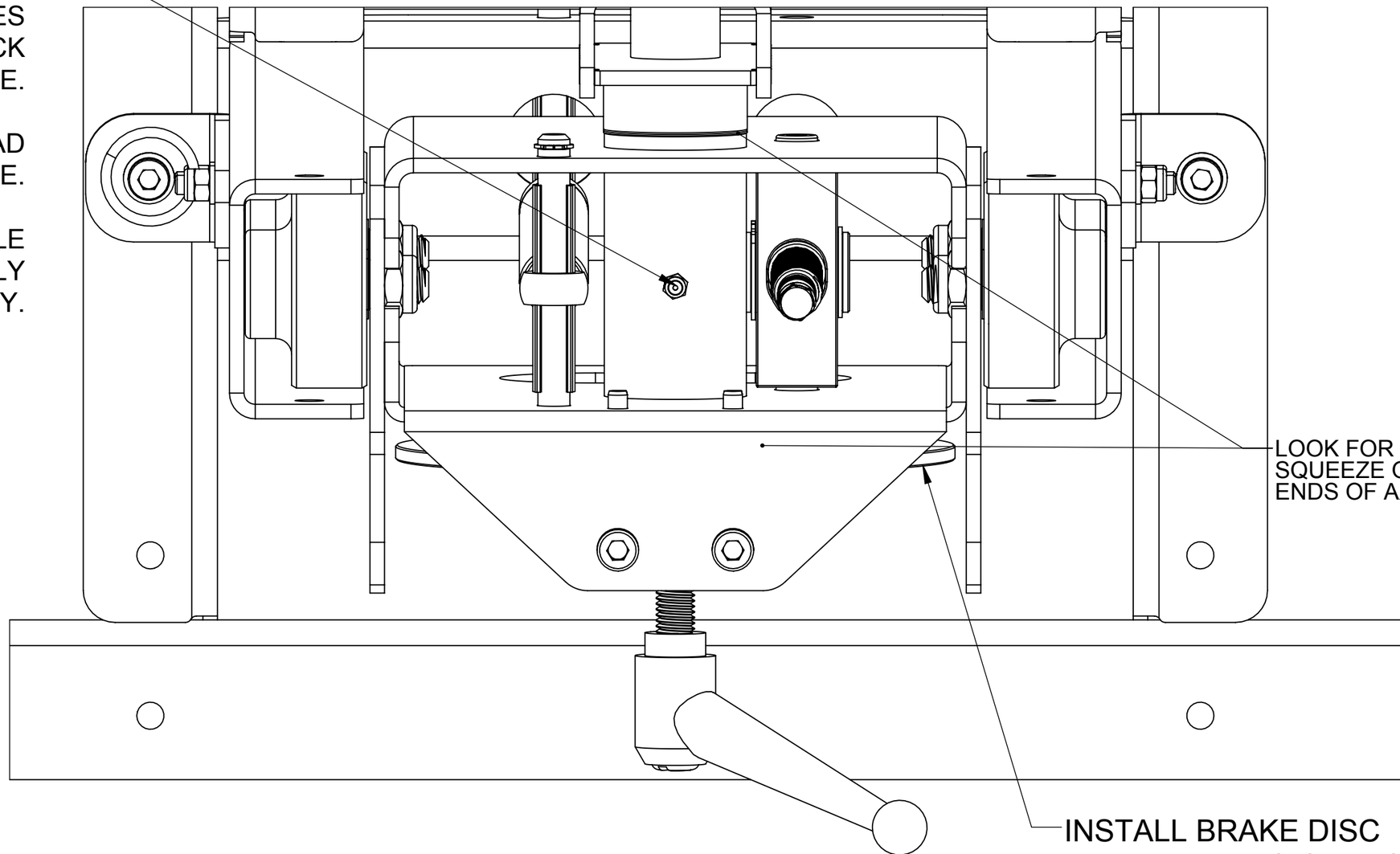

LOOK FOR GREASE SQUEEZE OUT BOTH ENDS OF AXLE TUBE.

INSTALL BRAKE DISC AFTER AXLE IS GREASED AND EXCESS GREASE IS REMOVED.

X1 Trolley-7

ITEM NO.	PART NO.	QTY.	NOTE
5	37-003	2	
6	36-002	5	
18	50-1038	2	
20	35-292	6	
27	37-119	1	
31	50-3407	1	@
35	37-3411	1	
37	37-3249	2	
38	35-273	2	
39	36-002	2	
40	35-3013	2	
48	50-3432	2	@
50	36-3404	2	
51	37-162	1	
52	50-3463	1	@
53	37-3418	1	
60	37-3419	1	

LEGEND:
* Not avialable for sale
† Assembly diagram available
± Part of larger assembly
¿ Comes with hardware
‡ Not shown
@ Special Order

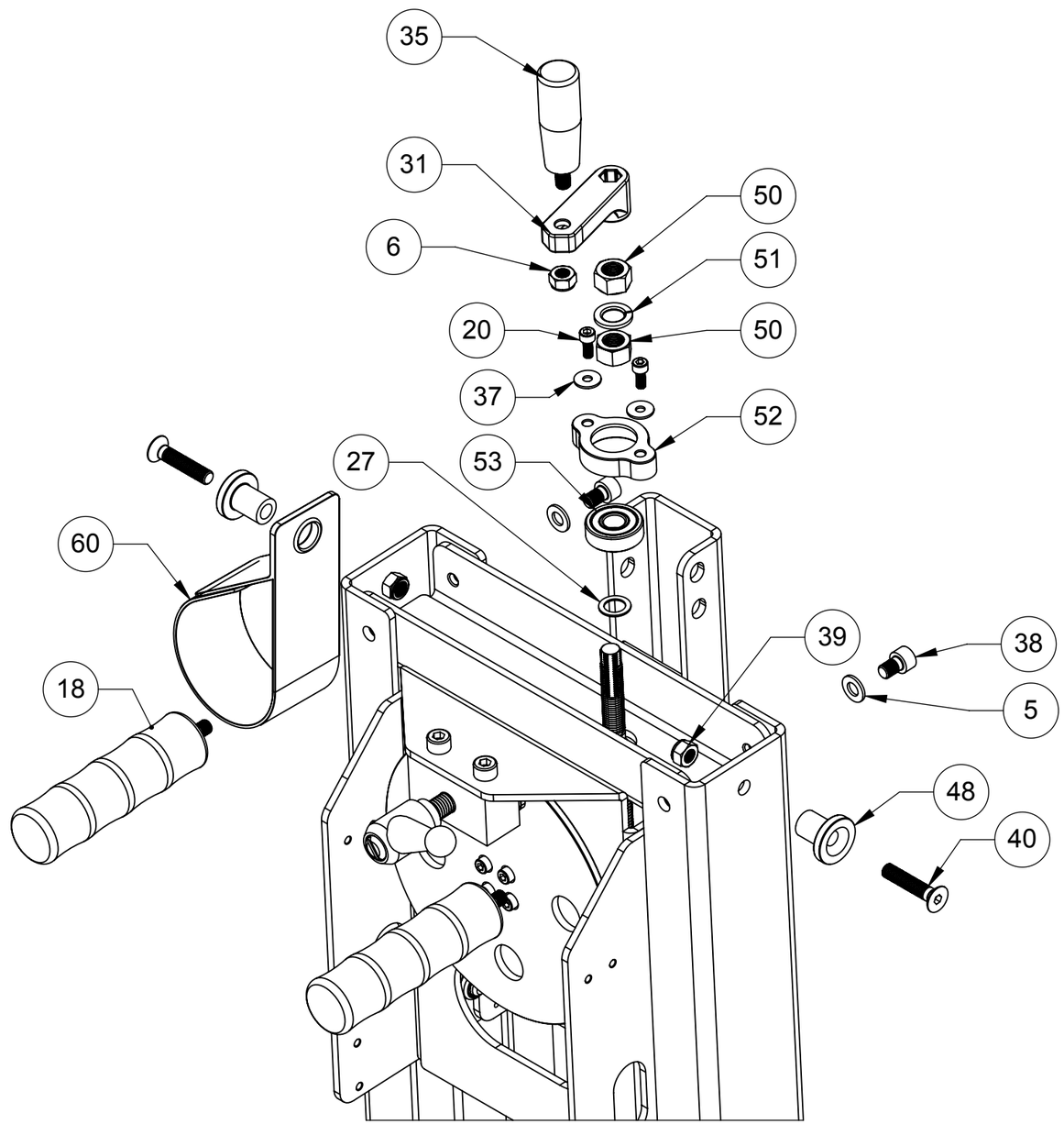

X1 Trolley-8

ITEM NO.	PART NUMBER	QTY.	NOTE
1	50-3412	1	
2	37-110	1	
3	35-260	1	
4	50-3403	1	
5	50-3407	1	@
6	50-3463	1	
7	37-3411	1	
8	37-3418	1	
9	35-292	2	
10	37-3249	2	
11	37-119	1	
12	36-3404	2	
13	37-162	1	
14	36-002	1	

LEGEND:
* Not avialable for sale
† Assembly diagram available
± Part of larger assembly
¿ Comes with hardware
‡ Not shown
@ Special Order

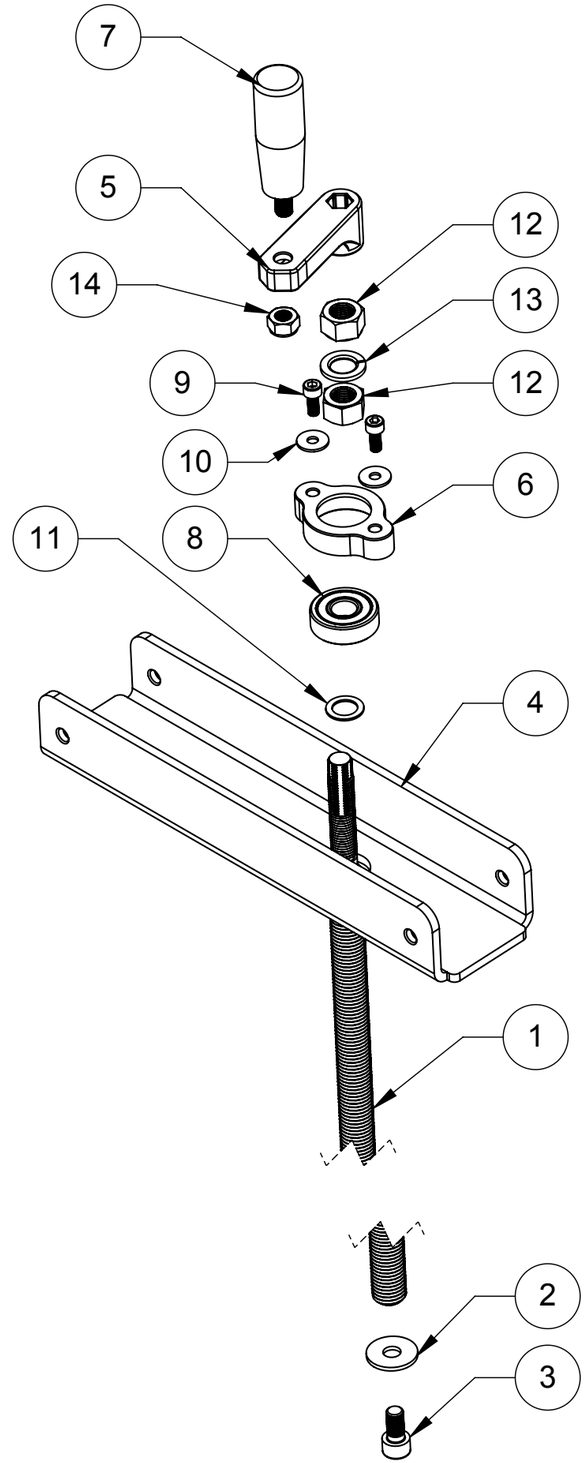

X1 Trolley-9

ITEM NO.	PART NUMBER	QTY.	NOTE
12	35-347	8	
15	37-108	8	
25	37-162	4	
62	36-001B	8	
64	50-3404	2	
65	35-348	4	
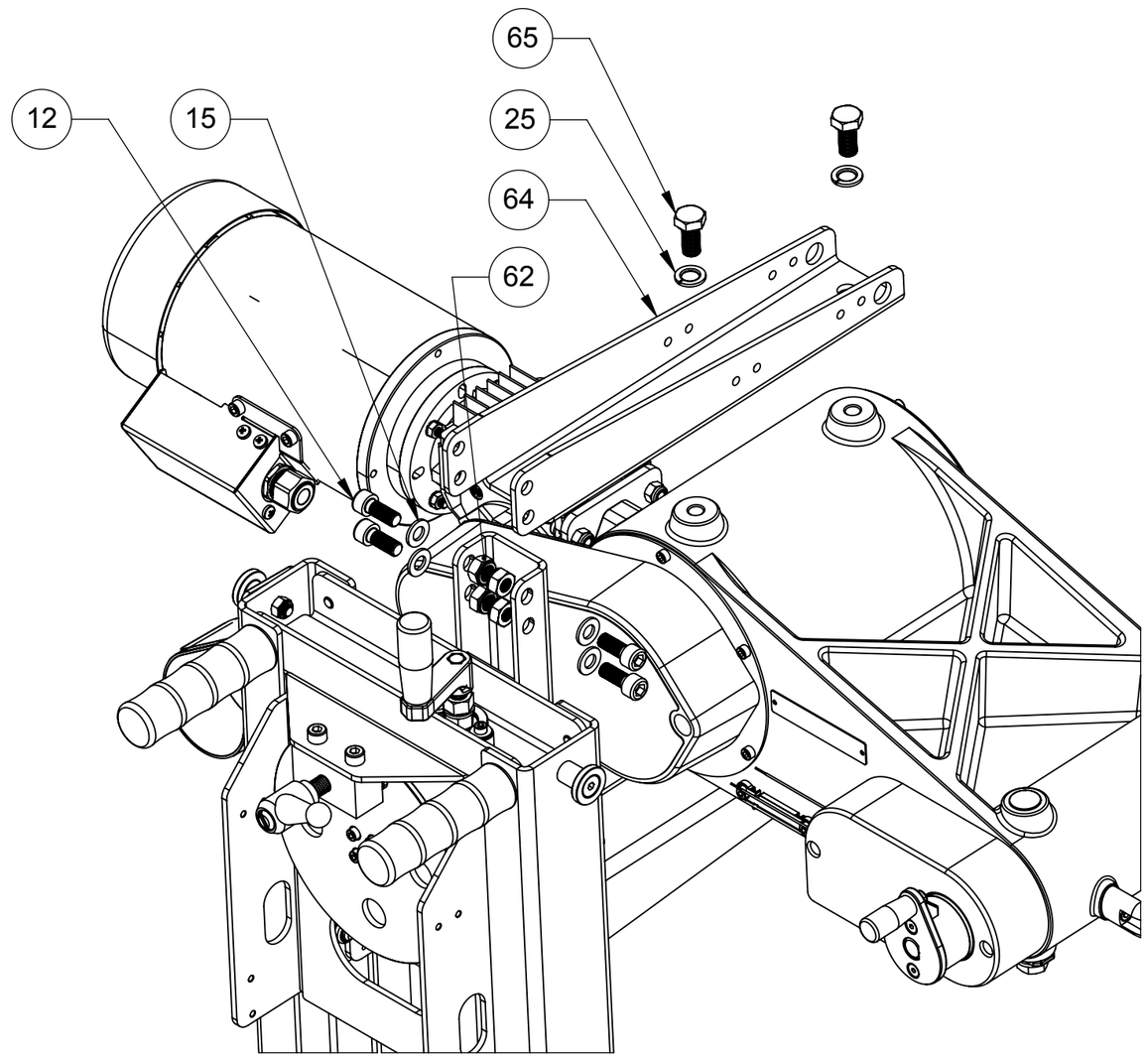
LEGEND:
* Not avialable for sale
† Assembly diagram available
± Part of larger assembly
¿ Comes with hardware
‡ Not shown
@ Special Order